INVERTER GENERATOR USER'S MANUAL

GM4000Xi

4000 / 3200
STARTING WATTS RUNNING WATTS

WARNING: SAVE THIS MANUAL FOR FUTURE REFERENCE

This manual contains important information regarding safety. Operation, maintenance and storage of this product. Before use, read carefully and understand all cautions, warnings, instructions and product labels. Failure to do so could result in serious personal injury and/or property damage.

California
Proposition 65 Warning
The engine exhaust from this product contains chemicals known to the state of California to cause cancer, birth defects or other reproductive harm.

California
Proposition 65 Warning
Certain components in this product and its related accessories contain chemicals known to the state of California to cause cancer, birth defects or other reproductive harm. Wash hands after handling.

DISCLAIMERS:
All information, illustrations and specifications in this manual are based on the latest information available at the time of publishing. The illustrations used in this manual are intended as representative reference views only. Moreover, because of our continuous product improvement policy, we may modify information, illustrations and/or specifications to explain and/or exemplify a product, service or maintenance improvement. We reserve the right to make any change at any time without notice. Some images may vary depending upon which model is shown.

ALL RIGHTS RESERVED:
No part of this publication may be reproduced or used in any form by any means - graphic, electronic or mechanical, including photocopying, recording, taping or information storage and retrieval systems - without the written permission of CHONGQING DINKING POWER MACHINERY CO., LTD

⚠ DANGER

This manual contains important instructions for operating this inverter generator. For your safety and the safety of others, be sure to read this manual thoroughly before operating the generator. Failure to properly follow all instructions and precautions can cause you and others to be seriously hurt or killed.

UNPACKING

⚠ CAUTION

Always have assistance when lifting the generator. The generator is heavy; lifting it could cause bodily harm.

Avoid cutting on or near staples to prevent personal injury.

Tools required - box cutter or similar device.

1. Carefully cut the packing tape on top of the carton.
2. Remove socket wrench, and oil funnel and save for later.
3. Carefully cut two sides of the carton to remove the generator.

WHAT COMES IN THE BOX

Dual-Purpose Screwdriver (1)
Funnel (1)

DESCRIPTION OF FITTINGS

Spark Plug Socket Wrench	Funnel
Used in spark plug maintenance, inspection, and installation.	It's used to oil the generator.

Note: Actual tools may differ in appearance or design from image shown.

TABLE OF CONTENTS

SAFETY WARNING 4

SAFETY INSTRUCTIONS 5

NAMES OF COMPONENTS 7

CONTROL FUNCTIONS 8

PREPARATIONS 9

1.Fuel....9
2.Oil....9
3.Pre-operation Inspection....10

STARTING UP THE GENERATOR 11

SHUTTING DOWN THE GENERATOR 13

USING THE GENERATOR 14

1.Service Environment of the Generator....14
2.Generator Wiring....14
3.Generator Grounding....15

SERVICE AND MAINTENANCE 16

1.Spark Plug Inspection....17
2.Adjustment of the Carburetor....18
3.Replacement of Oil....18
4.Air Filter....19
5.Fuel Filter Screen....20

STORAGE AND TRANSPORT 21

1.Generator Storage....21
2.Generator Transport....22

TROUBLESHOOTING 23

TECHNICAL PARAMETERS 25

CHOOSING A GENERATOR 26

SAFETY WARNING

Personal and property safeties of you and others are very vital. Please read the Safety Warning in the User's Manual and the decals of the generator set carefully.The Safety Warning can alert you to those potential hazards that could harm you and others. In front of each Safety Warning, there is one of four words "**DANGER**" "**WARNING**", "**ATTENTION**", and "CAREFUL". Details are as follows:

⚠ DANGER

Failure to follow the instruction will result in being in peril of your life or extremely serious injury.

⚠ WARNING

Failure to follow the instruction will result in being in peril of your life or very serious injury.

⚠ CAREFUL

Failure to follow the instruction will result in minor injury.

ATTENTION

Failure to follow the instruction will result in the damage to your generator set and other properties.

NEUTRAL FLOATING

For portable generators where the neutral is floating, the operator's manual shall include the following wording or equivalent:

The portable generator stator winding is isolated from the frame and from the AC receptacle ground pin; and Electrical devices that require a connection between one conductor pin and the grounded receptacle pin may not function properly.

SAFETY INSTRUCTIONS

Before operating the generator, it will help you avoid accidents to read and understand the Manual and familiarize yourself with the safe operation procedures of the generator.

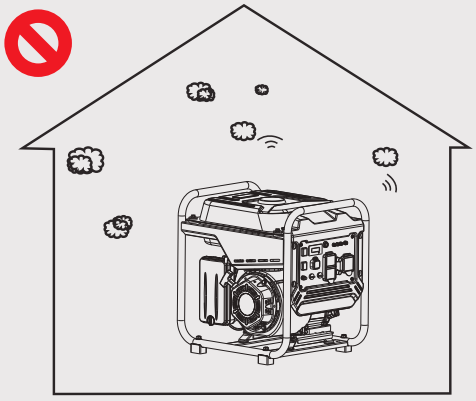

Please do not use indoors

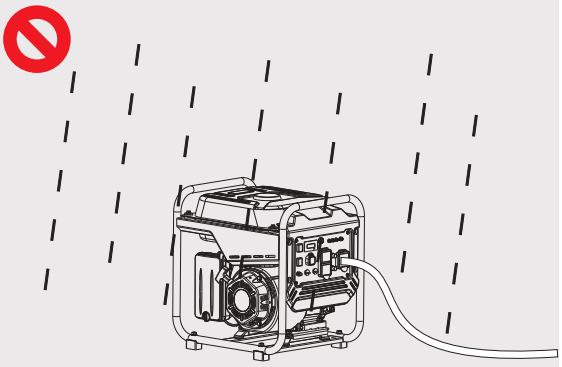

Please do not use in humid environment

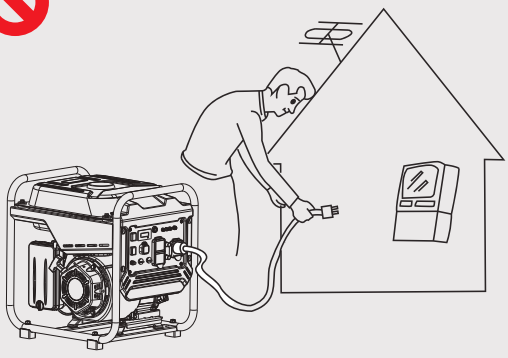

Do not directly connect to the household power supply system

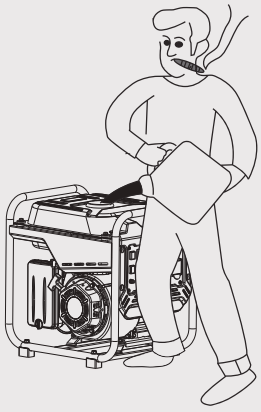

Please do not smoke when refueling

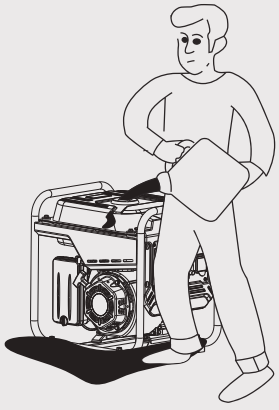

Please do not spill when refueling

Please shut down the generator before refueling

SAFETY INSTRUCTIONS

SAFETY LABELS AND DECALS

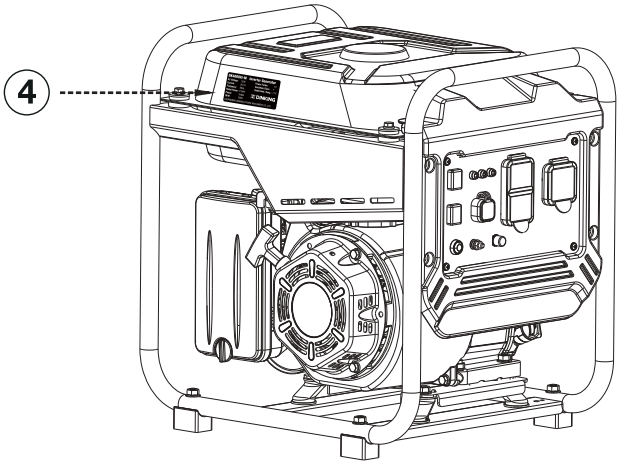

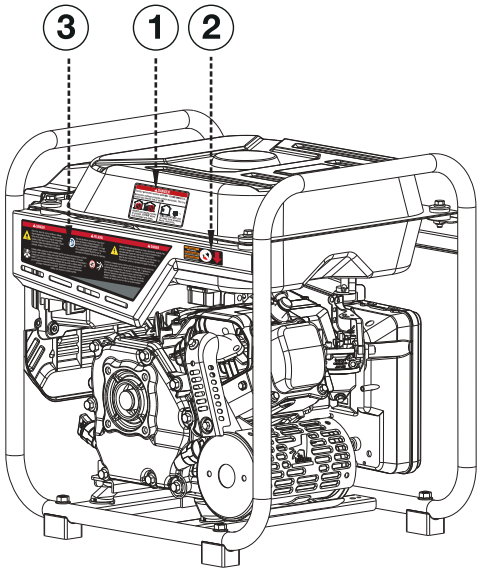

1

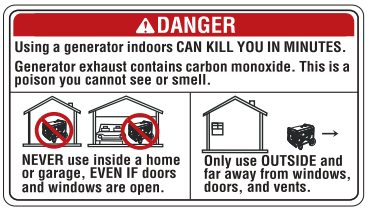

2

3

4

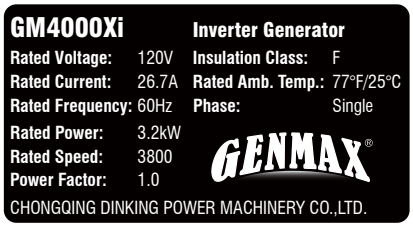

NAMES OF COMPONENTS

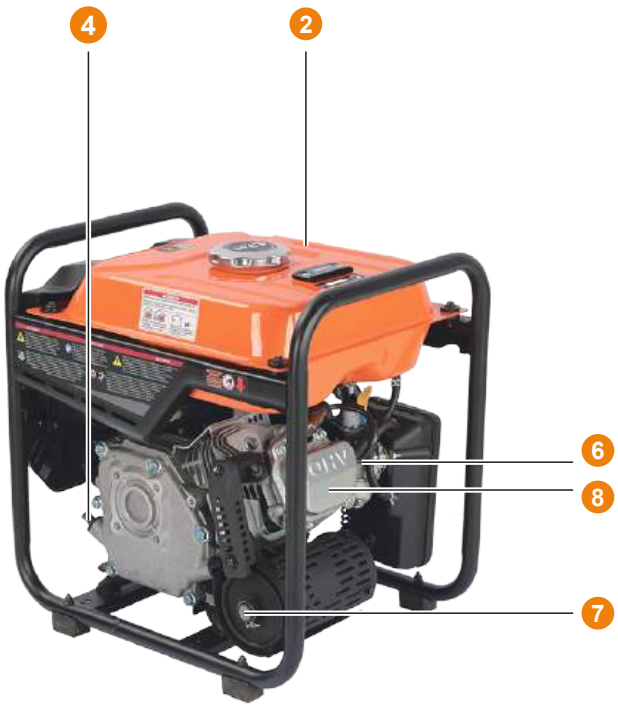

① **Fuel Tank Cap:** Open the fuel tank cap and fill with proper amount of gasoline.

② **Fuel Tank:** Store the added gasoline.

③ **Control Panel:** Contains the reset breaker, outlets and warning lights.

④ **Oil Dipstick:** Unscrew the oil dipstick and add oil or change oil.

⑤ **Generator Frame:** Protects the generator for easy movement.

⑥ **Carburetor**

⑦ **Muffler:** Avoid contact until the engine is cooled down. The spark arrestor prevents sparks from exiting the muffler. It must be removed for servicing.

⑧ **Cylinder Head**

⑨ **Fuel Switch:** Rotate to ON to turn on fuel, rotate to OFF to turn off fuel.

⑩ **Air Cleaner:** To purify the waste gas.

⑪ **Recoil Handle:** Pull to start the engine.

CONTROL FUNCTIONS

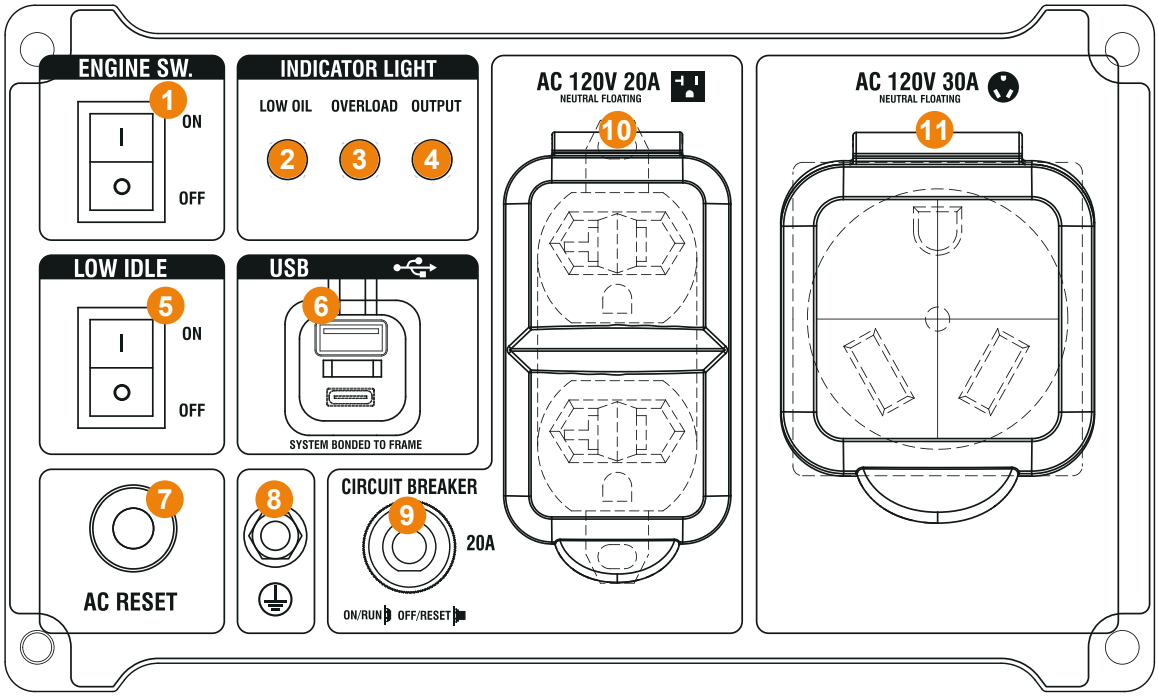

CONTROL PANEL FEATURES

① **Engine Switch:** Manage battery power and shutdown.

② **Low Oil Alarm:** Indicates low oil level.

③ **Overload Alarm:** Indicates that the inverter is overloaded.

④ **Power Indicator:** Indicates the inverter is ready to be used.

⑤ **Low Idle:** When turned to the ON position, the engine will sense the load needed and run at a slower RPM to save fuel.

⑥ **USB Duplex:** 5V DC, type-A and type-C connectors.

⑦ **Reset Breaker:** If the inverter is overloaded, the reset breaker will trip. The engine will continue to run, but there will be no output from the inverter. Unplug the devices and reduce the load. Push in the reset breaker to reset it.

⑧ **Ground Terminal:** The ground terminal is used to externally ground the inverter.

⑨ **Circuit Breaker:** If the inverter is overloaded, the reset breaker will trip to block current.

⑩ **120V AC 20A 5-20R Outlet:** The outlet is capable of carrying a maximum of 20 amps.

⑪ **120V AC 30A L5-30R Outlet:** The outlet is capable of carrying a maximum of 30 amps.

PREPARATIONS

1 *Fuel*

DANGER

- **Fuel is flammable and toxic, please read the Safety Instruction carefully before refueling;**
- **Do not fuel too full, otherwise fuel will spill after fuel tank is warmed;**
- **After refueling, confirm that the fuel tank cap has been tightened.**

ATTENTION

- **After refueling, dry gasoline residue with a clean and soft cloth in time to avoid damaging plastic enclosure;**
- **Unleaded gasoline must be used, as leaded gasoline can seriously damage internal parts of the generator;**

Remove the tank cap and do not add more gasoline than the red fuel level indicator line.
Fuel tank capacity: 1.7gal(6.5L)

2 *Oil*

No oil is filled into this generator when being delivered. Do not start up the generator without filling sufficient oil.

1. Please place the generator onto a horizontal plane surface;

2. Unscrew oil dipstick, Fill in 0.16gal(0.6L) oil (SAE 10W/30 oil is recommended, of which the grade is API standard Type SE or higher);

3. Tighten the oil dipstick.

3 *Pre-use Inspection*

WARNING

Even if the generator is not in service, its important component may suddenly fails. Before the generator is started up, if any of following components is unable to work properly, please inspect and repair carefully.

Tip: The condition of the generator shall be inspected before using every time.

Pre-operation inspection

Fuel

• Check fuel level in fuel tank of the generator, and fuel it if necessary.

Oil

• Check oil level of the generator, and fill oil if necessary;
• Check whether there is oil leaking.

Abnormal conditions during operation

• Check operating condition of the generator;
• If there is any need, please do not hesitate to consult your dealer.

STARTING UP THE GENERATOR

1. Make sure the generator is on a solid, flat, level surface. Disconnect all electrical loads from the generator. Never start or stop the generator with electrical devices plugged in or turned on.

2. Turn Fuel Switch to "ON" position.

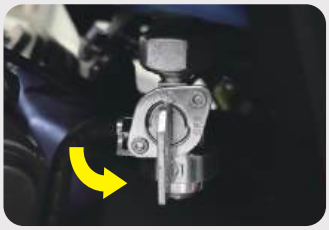

3. Turn the Choke Lever to the"CLOSED" position.

4. Press LOW IDLE Switch to "OFF".

5. Press Engine Switch to "ON".

6. First gently pull startup handle, until guy cable is hooked tight, and then pull it with effort.

Tip: When pulling the hand starter, hold generator carrying handle firm, to prevent the generator from overturning.

7. Turn the Choke Lever to the"OPEN" position.

STARTING UP THE GENERATOR

8. Plug in after started.

ATTENTION

For gasoline restarts with hot engine in hot ambient temperature >86°F (30°C): Rotate the Choke Lever to the “CLOSED” position for only one pull of the recoil cord. If generator does not start after first pull, rotate the Choke Lever to the “OPEN” position for the next three pulls. Too much choke leads to spark plug fouling and engine flooding. This will cause the engine not to start.

ATTENTION

For gasoline starting in standard ambient temperature >59°F(15°C): Keep Choke Lever in “CLOSED” position for three pulls of the recoil cord. If generator does not start after three pulls, rotate the Choke Lever to the “OPEN” position for the next three pulls. Too much choke leads to spark plug fouling and engine flooding. This will cause the engine not to start.

ATTENTION

For gasoline starting in cold ambient temperature < 59°F (15°C): Keep the Choke Lever in the “CLOSED” position until engine starts. As soon as the engine starts and runs smoothly turn the Choke Lever to the “OPEN” position. In extreme cold temperatures, this may take several seconds.

ATTENTION

If the engine starts but does not continue to run make certain that the generator is on a flat, level surface. The engine is equipped with a low oil sensor that will prevent the engine from running when the oil level falls below a critical threshold.

SHUTTING DOWN THE GENERATOR

1. Turn off and unplug all connected electrical loads. Never start or stop the generator with electrical devices plugged in or turned on.

2. Press Engine Switch to "OFF" position;

3. Turn Fuel Switch to "OFF" position.

USING THE GENERATOR

1 *Service Environment of the Generator*

• Applicable temperature: 23℉~104℉(-5°C~ 40°C);
• Applicable humidity: below 95%;
• Applicable altitude: regions below 1,500 m (It shall be used by reducing power in regions above 1,000 m).

Standard atmospheric condition

• Ambient temperature Tr: 298k (77℉(25°C))
• Relative air humidity Φr: 30%
• Absolute atmospheric pressure Pr: 100kPa

When actual environmental condition is inconsistent with the condition of output power of the generator set:

• Every 4℉(5°C) of increase in ambient temperature will reduce the power of generator by about 2%.
• Every 30% of increase in relative humidity of air will reduce the power of generator by about 1.5%.
• Every 300 m rising of ASL will reduce the power the generator by about 4.5%.

2 *Generator Wiring*

• When the generator is connected to household power source as a backup power supply, the connection shall be carried out by a professional electrician or a person familiar with electricity.
• After connecting the load to the generator, check carefully whether electrical connection is safe and reliable. Improper electrical connection may cause generator damage, burning or fire.
• Avoid connecting this generator to commercial power outlet.
• When extending the cable, be sure not to exceed its length.
① 60m cross-section area is 1.5mm²
② 100m cross-section area is 2.5mm²
• The appearance of extension cable shall be protected by a layer of tough and elastic rubber cover (IEC25) or other substitutes.

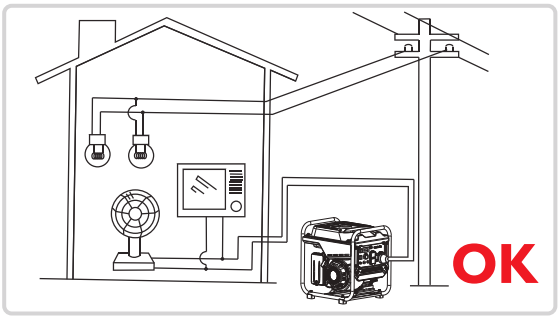

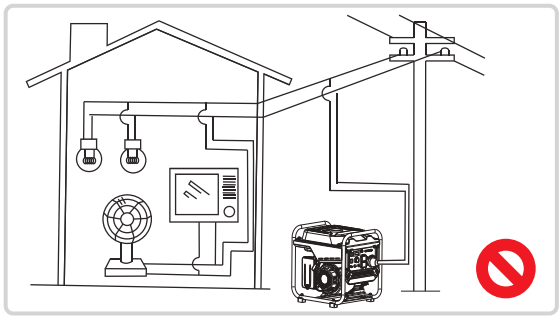

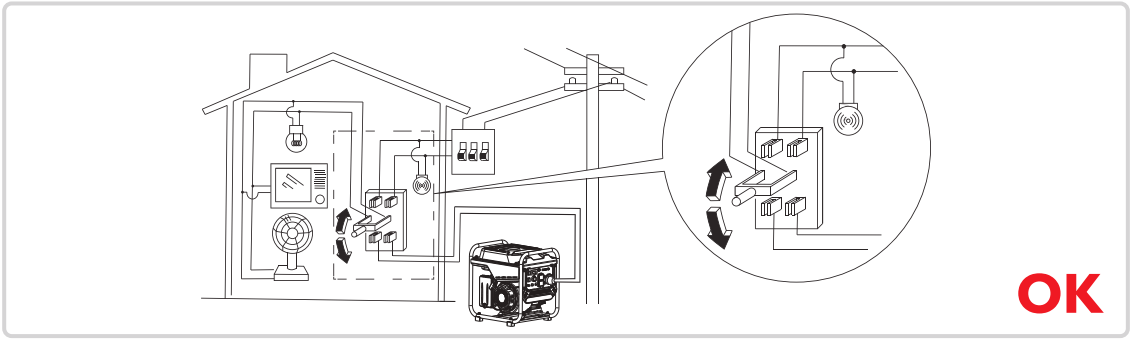

USING THE GENERATOR

Connection of AC power

WARNING

All electrical equipment shall be disconnected before inserting the plug.

ATTENTION

• Make sure that all electrical equipment, including wires and plugs, are in good condition before connecting to the generator;
• Make sure that all loads driven by the generator are within rated load range;
• Make sure that load current is within rated current range of rated socket.
Tip: Make sure that the generator set is grounded, and if electrical equipment requires grounding, the generator set must be grounded.
① Start up the engine;
② Turn energy-saving switch to "ON";
③ Insert the plug into AC outlet;
④ Make sure that AC indicator is lit up;
⑤ Switch on electrical equipment.
Tip: Before increasing engine speed, energy-saving switch must be switched to "OFF". If the generator set supplies power to multi loads or electrical equipment, start from large to small according to the size of each electrical equipment.

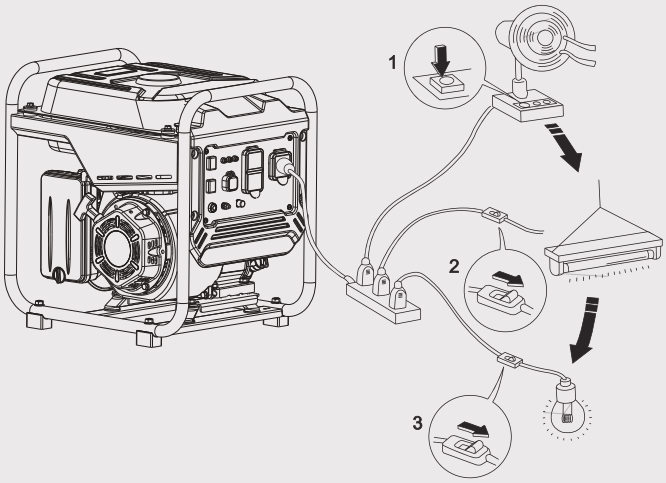

3 *Generator Grounding*

In order to prevent any damage to the generator caused by electric shock or improper electrical application, it is recommended that the generator is grounded with good conductor with insulating sheath.

① Please use grounding wire with sufficient electrical energy capacity;
② Connect one end of grounding wire reliable to grounding bolt on control panel of the generator set;
③ Insert grounding body (iron rod with a diameter of 5 ~ 10mm) 200mm below into the earth and lead it out with conductor;
④ Connect the other end of the grounding wire reliable to the led wire of grounding body.

SERVICE AND MAINTENANCE

Good maintenance and service is the best guarantee for safe, economical and zero-failure operation. It also contributes to environmental protection.
In order to keep the generator in good condition, you must inspect and maintain it regularly. The maintenance schedule is as follows:

Item \ Maintenance cycle		Each	First in 1 month or 20 hours	Then every three months or every 50 hours	100 hours per year or use
Engine oil	Check-fill	√			
	Replace		√	√	
Gearbox gear Oil (if any)	Check oil	√			
	Replace		√	√	
Air cleaner element	Inspection	√			
	Clean		√		
	Replace			√	
Settling cup (if any)	Clean				√
Spark plug	Clean-adjust				√*
Spark eliminator	Clean			√	
Idle speed (if any)**	Check-adjust				√
Valve clearance**	Check-adjust				√
Fuel tank and fuel filter***	Clean				√
Fuel line	Inspection	Every two years (Please replace if necessary)			
Cylinder head, piston	Remove carbon deposit**	Displacement < 225cc, every 125 hours; displacement capacity ≥ 225cc, every 250 hours.			

* These items shall be replaced if necessary;
** These items shall be maintained by the dealer authorized by the Company, unless the user has proper tools and maintenance ability.

ATTENTION

- If it often works under high temperature or high load, oil shall be changed every 25 hours;
- If it often works in dusty or harsh environment, air cleaner element shall be cleaned every 10 hours. If necessary, the air cleaner element shall be replaced every 25 hours;
- It shall be maintained on spot-inspection cycle and time, whichever is earlier;
- If maintenance cycle time has elapsed, perform the maintenance as soon as possible as per the table above.

SERVICE AND MAINTENANCE

⚠ *WARNING*

Please shut down the engine first before performing any maintenance. The engine shall be placed in a horizontal position. In order to prevent the engine from starting up, separate spark plug cap shall be separated from spark plug.
Do not use it indoors or use it in a tunnel, cave or other places ventilated poorly. Make sure that work area is well ventilated. Exhaust gas from the engine contains toxic gases, carbon oxides, and the inhalation can cause shock, loss of consciousness, and even death.

1 *Spark Plug Inspection*

Spark plug is an important part of the generator, which must be inspected regularly.

1. Remove the high voltage assembly;

2. Insert the screwdriver into the sleeve, to screw it counterclockwise, and then remove the spark plug;

3. Check whether there is discoloration, and remove carbon deposits.Check whether there is little pale to moderate brown on ceramic cores around center electrode of the spark plug;

4. Check the model of spark plug and clearance.
Spark plug gap: 0.7-0.8mm
Standard spark:

BRAND	MODEL
NGK	BPR6ES
TORCH	F6RTC

Tip: The spark plug clearance is required to be measured by line thickness gauge, which shall be adjusted if necessary.

5. Install the spark plugs in reverse order of removal.
Spark plug torque: 22.5 N.m

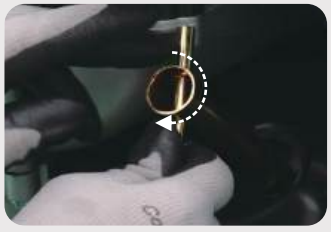

Tip: If there is no torque wrench when installing the spark plug, a better estimation method is to screw it 1/4-1/2 turns by force after screwing it in place, but the spark plug shall be screwed to specified torque as soon as possible.

2 *Adjustment of the Carburetor*

The carburetor is an important components of the engine. The adjustment shall be carried out by a dealer with professional knowledge, professional data and equipment, to ensure that the adjustment is proper.

3 *Replacement of Oil*

WARNING

Do not drain the oil immediately after turning off the generator. Oil temperature is very high, when operating, take care to avoid scalding.

1. Put the generator on a horizontal surface, start the generator, run it for a few minutes to increase its temperature, and then turn off the engine;

2. Unscrew oil dipstick;
(The purpose is to make the oil flow faster)

3. Place an oil pan (or suitable container) under the oil drain bolt, remove the oil drain bolt and allow the oil to drain;

4. Refill oil to a proper level, tighten oil dipstick.

Recommended oil: SAE S10W/30
Oil grade: API standard Model SJ or higher
Volume: 0.16gal(0.6L)

4 *Air Filter*

Dirty air cleaner may prevent air from flowing into the carburetor. In order to prevent failure of the carburetor, please maintain air cleaner regularly. If being used in a dusty environment, it shall be maintained frequently.

1. Remove screws , to remove cover plate of air cleaner ;

2. Clean foam cleaner element with cleaning solvent and blow it dry, Put a few drops of oil on the filter element;

ATTENTION

Be sure not to twist the foam cleaner element forcibly to avoid damage.

3. Put foam cleaner element into air cleaner;
Tip: Make sure that the surface of foam cleaner element is in close contact with air cleaner, and there shall be no gap leaking air. Be sure not to start the engine before air cleaner is assembled, because it will generate excessive toxic gas and wear the cylinder;

4. Reassemble empty air cleaner cap back to original position, and tighten screws.

5 *Fuel Filter Screen*

WARNING

Be sure not to open fuel tank of the generator in a place where smoking or with flame.

1. Remove fuel tank cap and fuel tank filter screen.
2. Clean fuel tank filter screen with gasoline.
3. Wipe filter screen dry, and put it back into fuel tank.
4. Reassemble fuel tank cap.

ATTENTION

Be sure to screw fuel tank cap tight.

STORAGE AND TRANSPORT

1 *Generator Storage*

If it is stored long-term, in order to prevent aging, you shall take some storage measures.

1. Follow the shutdown steps to shut down the generator.

2. Open fuel tank cap, to take out fuel filter screen. Pump all fuel in fuel tank into special fuel tank, and then reassemble fuel tank cap back.

3. Start up the engine to burn off fuel in the carburetor, and then shut it down.

Tip: Do not connect any electrical equipment. Running time of the engine depends on remaining fuel in the fuel tank.

4. Locate the carburetor drain oil bolt and place a suitable container under it to capture the discharged fuel.

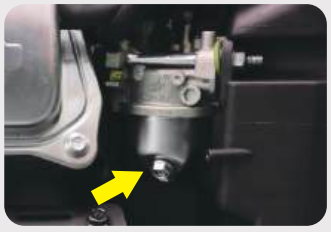

5. Loosen the carburetor drain screws until you see fuel draining from the carburetor.

6. Allow fuel to drain into the container and tighten the drain screws on the carburetor.

7. Unscrew oil dipstick, and drain oil in the crankcase off. Fill new oil to upper oil limit, and then assemble oil dipstick.

8. Gently pull startup handle until you feel resistance, allowing both inlet valve and exhaust valve to be closed.

9. Place the generator set in a clean and dry area.

2 *Generator Transport*

- When the generator set is transported, it shall be ensured that there is no fuel spilling;
- Do not fill excessive fuel into fuel tank;
- Do not run the generator, and avoid direct sunlight;
- Do not transport the generator set on rough road for long time.

TROUBLESHOOTING

Problem	Possible Causes	Probable Solutions
Engine will not start	FUEL RELATED:	FUEL RELATED:
	1. No fuel in tank or fuel valve closed.	1. Fill fuel tank with fresh 87+ octane stabilizer-treated unleaded gasoline and open fuel valve. **Do not use gasoline with more than 10% ethanol (E15, E20, E85, etc.).**
	2. Choke not in START position, cold engine.	2. Move Choke to START position.
	3. Gasoline with more than 10% ethanol used. (E15, E20, E85, etc.)	3. Clean out ethanol rich gasoline from fuel system. Replace components damaged by ethanol. Use fresh 87+ octane stabilizer-treated unleaded gasoline only. **Do not use gasoline with more than 10% ethanol (E15, E20, E85, etc.).**
	4. Low quality or deteriorated, old gasoline.	4. Use fresh 87+ octane stabilizer-treated unleaded gasoline. **Do not use gasoline with more than 10% ethanol (E15, E20, E85, etc.).**
	5. Carburetor not primed.	5. Pull on Starter Handle to prime.
	6. Dirty fuel passageways.	6. Clean out passageways using fuel additive. Heavy deposits may require further cleaning.
	7. Carburetor needle stuck. Fuel can be smelled in the air.	7. **Gently** tap side of carburetor float chamber with screwdriver handle.
	8. Too much fuel in chamber. This can be caused by the carburetor needle sticking.	8. Turn Choke to RUN position. Remove spark plug and pull the start handle several times to air out the chamber. Reinstall spark plug and set Choke to START position.
	9. Clogged Fuel Filter.	9. Replace Fuel Filter.
	IGNITION (SPARK) RELATED:	IGNITION (SPARK) RELATED:
	1. Power Switch at OFF position.	1. Turn Power Switch to ON.
	2. Spark plug cap not connected securely.	2. Connect spark plug cap properly.
	3. Spark plug electrode wet or dirty.	3. Clean spark plug.
	4. Incorrect spark plug gap.	4. Correct spark plug gap.
	5. Spark plug cap broken.	5. Replace spark plug cap.
	6. Circuit breaker tripped (electric start models only).	6. Reset circuit breaker. Check wiring and starter motor if breaker continues to trip.
	7. Incorrect spark timing or faulty ignition system.	7. Have qualified technician diagnose/ repair ignition system.
	COMPRESSION RELATED:	COMPRESSION RELATED:
	1. Cylinder not lubricated. Problem after long storage periods.	1. Pour tablespoon of oil into spark plug hole. Crank engine a few times and try to start again.
	2. Loose or broken spark plug. (Hissing noise will occur when trying to start.)	2. Tighten spark plug. If that does not work, replace spark plug. If problem persists, may have head gasket problem, see #3.
	3. Loose cylinder head or damaged head gasket. (Hissing noise will occur when trying to start.)	3. Tighten head. If that does not remedy problem, replace head gasket.
	4. Engine valves or tappets mis-adjusted or stuck.	4. Have qualified technician adjust/ repair valves and tappets.
	ENGINE OIL RELATED:	ENGINE OIL RELATED:
	1. Low engine oil.	1. Fill engine oil to proper level. Check engine oil before EVERY use.
	2. Engine mounted on slope, triggering low oil shutdown.	2. Operate engine on level surface. Check engine oil level.
	SPARK ARRESTOR RELATED:	SPARK ARRESTOR RELATED:
	1. Spark Arrestor clogged with soot.	1. Clean and replace Spark Arrestor.

Follow all safety precautions whenever diagnosing or servicing the generator or engine.

TROUBLESHOOTING

Problem	Possible Causes	Probable Solutions
Engine misfires	1. Spark plug cap loose. 2. Incorrect spark plug gap or damaged spark plug. 3. Defective spark plug cap. 4. Old or low quality gasoline. 5. Incorrect compression.	1. Check cap and wire connections. 2. Re-gap or replace spark plug. 3. Replace spark plug cap. 4. Use only fresh 87+ octane stabilizer-treated unleaded gasoline. **Do not use gasoline with more than 10% ethanol (E15, E20, E85, etc.).** 5. Diagnose and repair compression. (Use **Engine will not start: COMPRESSION RELATED** section.)
Engine stops suddenly	1. Low oil shutdown. 2. Fuel tank empty or full of impure or low quality gasoline. 3. Defective fuel tank cap creating vacuum, preventing proper fuel flow. 4. Faulty magneto. 5. Disconnected or improperly connected spark plug cap.	1. Fill engine oil to proper level. Check engine oil before EVERY use. 2. Fill fuel tank with fresh 87+ octane stabilizer treated unleaded gasoline. Do not use gasoline with more than 10% ethanol (E15, E20, E85, etc.). 3. Test/replace fuel tank cap. 4. Have qualified technician service magneto. 5. Secure spark plug cap.
Engine stops when under heavy load	1. Dirty air filter 2. Engine running cold.	1. Clean element. 2. Allow engine to warm up prior to operating equipment.
Engine knocks	1. Old or low quality gasoline. 2. Engine overloaded. 3. Incorrect spark timing, deposit buildup, worn engine, or other mechanical problems.	1. Fill fuel tank with fresh 87+ octane stabilizer-treated unleaded gasoline. **Do not use gasoline with more than 10% ethanol (E15, E20, E85, etc.).** 2. Do not exceed equipment's load rating. 3. Have qualified technician diagnose and service engine.
Engine backfires	1. Impure or low quality gasoline. 2. Engine too cold. 3. Intake valve stuck or overheated engine. 4. Incorrect timing.	1. Fill fuel tank with fresh 87+ octane stabilizer-treated unleaded gasoline. **Do not use gasoline with more than 10% ethanol (E15, E20, E85, etc.).** 2. Use cold weather fuel and oil additives to prevent backfiring. 3. Have qualified technician diagnose and service engine. 4. Check engine timing.
Attached device doesn't have power	1. Device not plugged in properly. 2. Circuit Breaker tripped. 3. Product needs service.	1. Turn off and unplug the device, then plug it back in again and turn on. 2. Turn off and unplug device, reset Circuit Breaker, plug in device and turn on. 3. Have product repaired.
Attached device begins to operate abnormally	1. Problem with device. 2. Rated load capacity exceeded.	1. Immediately unplug device. Have device repaired by a qualified technician, or replace device. 2. Lower the number of items plugged into the generator to stay within the rated capacity, or use a more powerful generator.

Follow all safety precautions whenever diagnosing or servicing the generator or engine.

TECHNICAL PARAMETERS

Item	GM4000Xi
Rated Power (kW)	3.2
Max. Power (kW)	4.0
Engine Model	170F/P-1
Bore x Stroke (mm)	70x58
Engine Type	4-stroke
Displacement (cc)	223
Gas Distribution Mode	OHV
Cooling Mode	Forced cooling wind
Rated Speed (RPM)	3800
Starting Method	Recoil start
Fuel Tank Volume (gal)	1.7(6.5L)
Fuel Type and Grade	Vehicle-use unleaded gasoline
Lubricating Oil Capacity (gal)	0.16(0.6L)
Lubricating Oil Model	SAE 10W/30
Noise dB (at 7m)(25% load)	66
Rated Voltage (V)	120
Rated Frequency (Hz)	60
Rated Power Factor	1
Phase Number	Single phase
Run Time @ 25% (h)	7
Fuel Consumption Rate (25% load)(L/h)	0.91
Fuel Consumption Rate (100% load)(L/h)	1.85
THD	≤5%
Overall Dimension (in.)	18.1×14.4×18.9(460×366×479mm)
Net Weight (lb.)	61.7(28kg)

GENMAX®

CHOOSING A GENERATOR

QUICK REFERENCE WATTAGE

Power Rating	Tool or Appliance	Running Watts	Starting Watts
1200 – 1800 Running Watts	Blender	300	650
	Coffee Maker	1500	
	Drill	600	900
	Fan	200	
	Furnace 1/4 hp	600	1000
	Game console	150	
	Hand sander	600	1200
	Hedge trimmer	450	1200
	Lamp	100	
	Laptop	800	
	LED/LCD TV	150	
	Microwave	1000	
	Modem/router	20	
	Paint sprayer	600	600
	Radio	100	
	Slow cooker	200	200
	String trimmer	350	875
	Sump Pump 1/3 hp	800	1300
	Work light	1000	
2800 – 3800 Running Watts	Belt sander	1200	2400
	Chainsaw	1200	2400
	Circular saw	1200	2000
	Edger	950	2400
	Electric grill	1650	
	Lawn mower	1200	2400
	Pressure washer	1200	2400
	Refrigerator	700	2200
	Washing machine	1150	2250
	Well pump	1000	2100
	Window AC 13k BTU	1800	2800
5500 – 12,000 Running Watts	Air compressor 1 hp	1600	4500
	Central AC 3 ton	5400	7200
	Electric Dryer	5400	6750
	Heat Pump 3 ton	3400	6500
	Water heater	4000	

†Chart for reference only. Check your device for ACTUAL wattage requirements.

HOW TO CALCULATE

Running Watts needed:
Total Running Watts of ALL items to be powered by the generator.

Starting Watts needed:
Add highest SINGLE Starting Watt to Total Running Watts needed above.

EXAMPLE

1 Calculate Running Watts:

Furnace	600
Lamp	100
Microwave	1000
Refrigerator	700
Total Running Watts	**2400**

2 Calculate Starting Watts:

Total Running Wattage	2400
Refrigerator	2200
Total Starting Watts	**4600**

LIMITED WARRANTY 3 YEAR LIMITED WARRANTY

FREE TECHNICAL SUPPORT

In production management, based on orderly, efficient, scientific principles. trying to do as better as possible in product design, development, production, inspection, etc. to make our production can keep orderly. And will continue to make improvement to make sure that keep the competitiveness.

Welcome friends at home and abroad to visit and guide, work together to create brilliant.

GENMAX®

ADD: 301 Doubleday Ave Ontario CA 91761

Phone 866-960-2920

E-mail service@genmaxpower.com

Http://www.genmaxpower.com

Facebook Linkedin YouTube